NOTE:
ALL FIXINGS TO BE INTO CONCRETE AND/OR FULLY FILLED & REINFORCED CONCRETE BLOCK WALLS

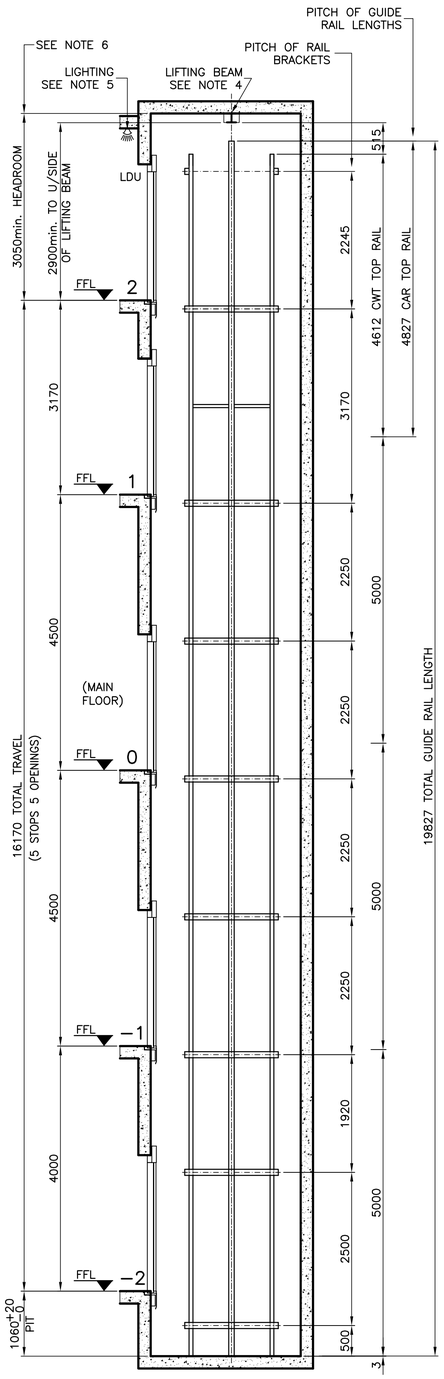

SECTIONAL ELEVATION
SCALE 1:50 AT A1

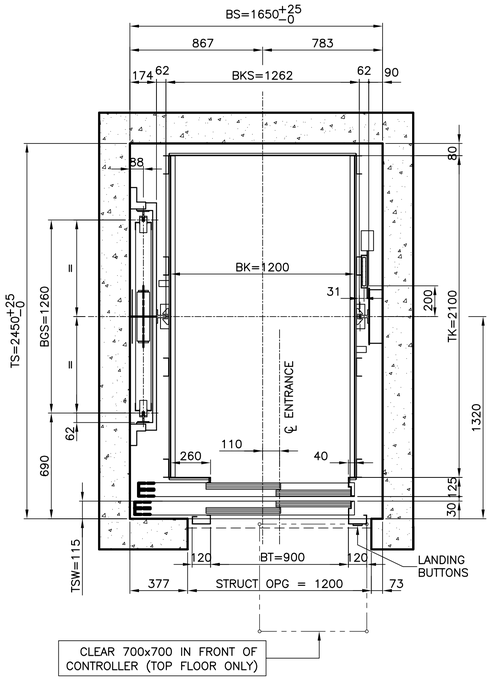

PLAN OF CAR IN WELL
SCALE 1:20 AT A1

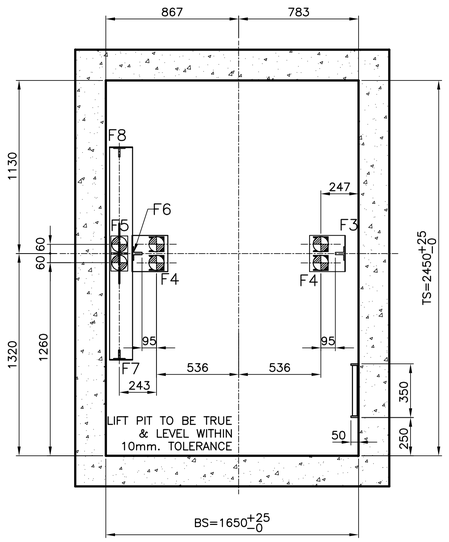

PLAN OF LIFT PIT
SCALE 1:20 AT A1

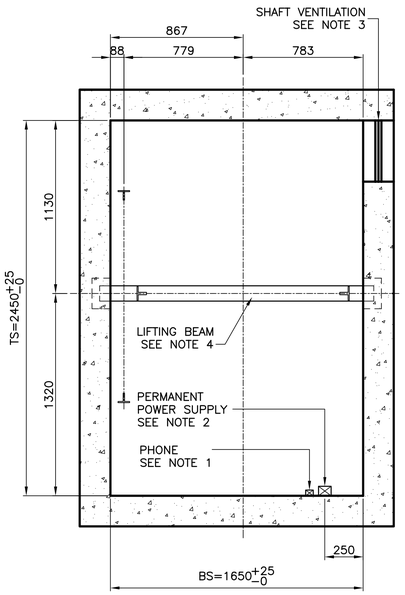

REFLECTED CEILING OF LIFT SHAFT
SCALE 1:20 AT A1

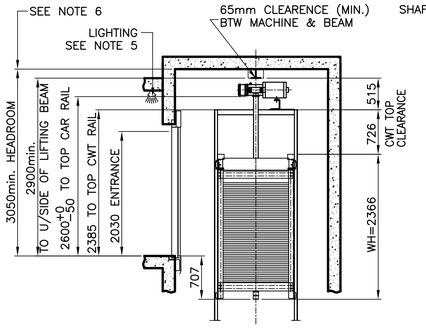

CWT TOP O/RUN DETAILS
SCALE 1:50 AT A1

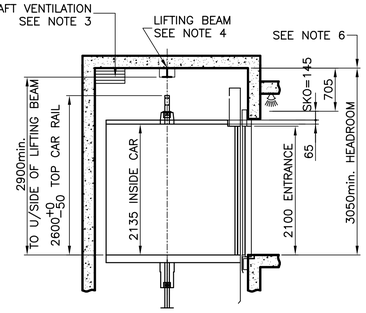

CAR TOP O/RUN DETAILS
SCALE 1:50 AT A1

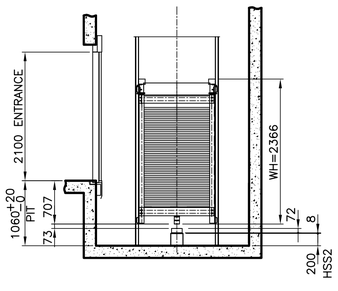

CWT BOTTOM O/RUN DETAILS
SCALE 1:50 AT A1

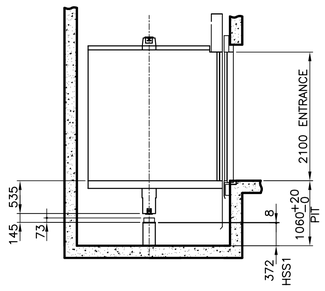

CAR BOTTOM O/RUN DETAILS
SCALE 1:50 AT A1

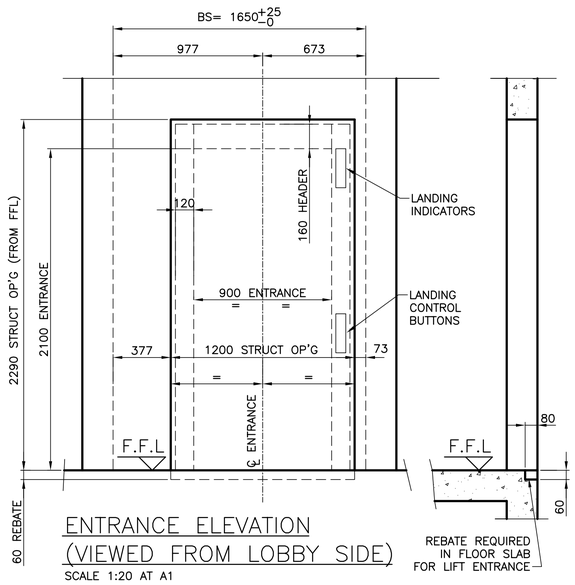

ENTRANCE ELEVATION
(VIEWED FROM LOBBY SIDE)
SCALE 1:20 AT A1

TABLE 1

ELECTRICAL DETAILS—PER LIFT	
RATED VOLTAGE (3 PHASE)	415±10V
NOMINAL CURRENT	30A
STARTING CURRENT	35.2A
MAX. SHORT CIRCUIT CURRENT	6 KA

ISSUED FOR INFORMATION

FORCES ON GUIDE RAILS

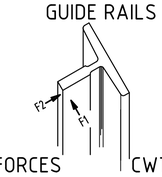

CAR FORCES	CWT FORCES
F1 = 1.65 kN	F1 = 0.95 kN
F2 = 3.30 kN	F2 = 1.90 kN

WORKS BY BUILDER (other trades)
FOR DETAILS OF WORKS BY BUILDER REFER TO SCHINDLER LIFTS AUSTRALIA ORDER OF ACKNOWLEDGEMENT

COMPLEMENTARY NOTES:

NOTE 1
PHONE (BY OTHERS) MOUNTED INSIDE LIFT SHAFT AT 2800mm. ABOVE TOP LANDING FFL & 350mm. FROM THE SIDE WALL.

NOTE 2
PERMANENT POWER SUPPLY (BY BUILDER) TO BE TERMINATED INTO 3 PHASE SPO (CLIPSAL, CAT. No.56C532) AND PROTECTED BY D-TYPE CURVE CIRCUIT BREAKER BASED ON TABLE 1, MOUNTED INSIDE LIFT SHAFT AT 2800mm. ABOVE TOP LANDING FFL & 250mm. FROM THE SIDE WALL. ACCORDING TO IEC60364-5-54:2007 THE PROTECTIVE CONDUCTOR SHALL EITHER HAVE A MIN. CROSS-SECTION OF 10mm2 OR A SECOND PARALLEL PROTECTIVE CONDUCTOR OF AT LEAST THE SAME CROSS-SECTION AREA HAS TO BE PROVIDED.

NOTE 3
MIN SHAFT VENTILATION REQUIRED AT THE TOP OF THE LIFT SHAFT IS 1% OF HORIZONTAL SECTION OF SHAFT. SHAFT VENT/LOUVRE. BY OTHERS.

NOTE 4
LIFTING BEAM TO BE ABLE TO WITHSTAND 2500Kg. SUSPENDED LOAD. DESIGNED, SUPPLIED AND INSTALLED BY OTHERS. BEAM TO BE 150mm MIN. HIGH (UC) BEAM, TO SUIT BEAM TROLLEYS. FLANGE WIDTH MUST BE MORE THAN 90mm AND LESS THAN 210mm.

NOTE 5
200 LUX PERMANENT LIGHTING AT TOP (LDU) LANDING BY BUILDER

NOTE 6
REDUCED HEADROOM WITH TEMPORARY SAFETY DEVICE (TSD)

MANUFACTURING NOTES

N° OF LIFTS	1	INTERNAL CAR HEIGHT	2135
LIFT N°s	1	SAFETY GEAR TYPE	GED 20
N° OF PASSENGERS	15	CAR GUIDE RAILS	T89/B
SPEED= VKN (m/s)	1.0	CAR BUFFERS MODEL	ACLA Autan 5
CONTROL SYSTEM	1 KS	N° OF CAR BUFFERS	4
ELECTRICAL SUPPLY	415V	COUNTERWEIGHT TYPE	CW12311
ROPING	2 : 1	COUNTERWEIGHT SIZE	600
N° OF BELTS	4	CWT LENGTH (mm)	2433
MACHINE TYPE	FMB130-LS-4C	CWT GUIDE RAILS	T75/3A
GEAR RATIO	GEARLESS	CWT BUFFER MODEL	ACLA Autan 5
MOTOR POWER (kW)	7.7	N° OF CWT BUFFERS	2
PULLEY SHEAVE Φ	85	GOVERNOR MODEL	GBP
DOOR OPERATOR	VVVF		
REAR ENTRANCE SIZE	N/A	**ESTIMATED WEIGHTS (kg)**	
FRONT ENTRANCE SIZE	900 x 2100	CAR WEIGHT	700
PLATFORM TYPE	5300 U'SLUNG	LOAD	1125
PLATFORM DEPTH	2100	COUNTERWEIGHT	1280
PLATFORM WIDTH	1200	MACHINE WEIGHT	220

ABBREVIATIONS

T15	Car Guide Shoe Type	**HSK**	Shaft Headroom
BK	Car Shell Width	**HT**	Clear Height of Landing Door
BGS	Distance between counterweight guides	**OKS9C**	Car Door Operator - Centre Opening
BKF1	Car Front Return Width - Left Hand	**OKRTX**	Top of Car Control Box
BKF2	Car Front Return Width - Right Hand	**P9KD**	Car Door Type
BKS	Distance between Car Guides	**S.I.**	Shaft Information
BO	Width of Machine Room	**T15**	Cwt Guide Shoe Type
BS	Shaft Width	**T89**	Rail Type - T8
BSN	Final Limit Switches	**TK**	Clear Car Depth
BT	Clear Width of Landing Door	**TKF**	Distance between edge of car sill and guide rail axis
C9N	Landing Door Type - Centre Opening	**TKT**	Distance from car front to centre of car control station
FRM10	Sling Model Designation	**TO**	Depth of machine room
G012211	Counterweight Type	**TS**	Depth of Shaft
G01	Safety Gear Type	**VKN**	Rated speed of car
HK	Clear Car Height to metal ceiling		
HQ	Travel Height		
HSG	Depth of Pit		

LOADS F3 = 27.7 kN F5 = 60.4 kN F7 = 17.0 kN
F4 = 41.2 kN F6 = 57.8 kN F8 = 17.0 kN

ATTENTION! All measurements are for finished masonry work complete with plaster.

All designs and information contained in this drawing remain our sole property and must neither be reproduced nor copied nor passed on to third parties nor passed on to third parties without our specific consent.

A	ISSUED FOR INFORMATION	BM	14/10/10

MODEL: S5300-1125 | REGISTRATION: LEM 6-98576/07

COMPLIANCE: AS1735.1-2003: Amendment 1 - 2006

Schindler Lifts Australia Pty.Ltd.
A.C.N. 005.838.773 BLDG D, 36-38 LORD ST, BOTANY, NSW, 2019
TELEPHONE (02) 9931-9900 FACSIMILE (02) 9931-9945

5300 MRL LAYOUT AND BUILDERS WORK
ADDRESS :

SCALE	DRAWN	DATE	CHECKED	APPROVED
AS SHOWN	AT	14/10/10	FF	DK

SIZE	CONT. No.	STATE	DRG No.	ISSUE
A1	AC5310155	NSW	NA0125-04-100	A